Work Order ID 129874

February-23-15 10:28:27 AM

129874

Item ID: D412-698-042 **Accept** *N900040100* **Setup Start** *NS1*

Revision ID: **Stop** *NS2*

Item Name: Hinge Panel Automatic Door Opener RH Aluminum Door

Start Date: 2/11/15 **Start Qty:** 1.00 *1* **Cust Item ID:**

Required Date: 2/23/15 **Req'd Qty:** 1.00 *1* **Customer:**

Reference:

Run Start *NR1*

Approvals: **Process Plan:** MCJ **Date:** 15-02-25 **Tooling:** _____ **Date:** _____

Stop *NR2*

QC: _____ **Date:** _____ **SPC (Y/N):** _____ **Date:** _____

Sequence ID/ Work Center ID	Operation Description	Set Up/ Run Hours	Tool ID	Tool #	Plan Code	Accept Qty	Reject Qty	Reject Number	Insp. Stamp
Draw Nbr / **Revision Nbr**									
DSI 9548 / C			DAS 6 9-89						
100 *100* DC	Document Control DOCUMENT CONTROL	0.00				1v	DAS 46 9-89	MHL APR 30 2015	
Doc.Control -USB or Paperwork	**Memo** Photocopy bluefile & type labels per PPPD412-698-042 CHG001	0.00							
110 *110* Packaging	Pick Kit	0.00				APR 29 2015		DAS 6 9-89	
Packaging	**Memo**	0.00							
120 *120* QC	QC4- 100% Inspect kits for completeness	0.00				1v	DAS 46 9-89	APR 30 2015	
Quality Control	**Memo**	0.00							

DART AEROSPACE

DQA: _____ Date: _____

WORK ORDER NON-CONFORMANCE / UPDATE

QA Closed: Date:

Work Order update only ☐

Work Order: _____

Part No. _____

NCR No. _____

DISPOSITION

- Rework ☐
- Scrap ☐
- Use-as-is ☐
- Suspected Unapproved ☐

AGAINST DEPARTMENT/PROCESS

- Skid-tube ☐
- Machining ☐
- Thermoforming ☐
- Large Fab ☐
- Crosstube ☐
- Small Fab ☐
- Finishing ☐
- Composite ☐
- Water Jet ☐
- Prod. Eng. Coor. ☐
- Rec/Store/Packaging ☐
- Supplier ☐
- Engineering ☐
- Quality ☐
- Other ☐

Root Cause		Date	Step	Qty	Description of work order update or non-conformance	Initial Chief Eng	Action Description	Sign & Date	Verification	QC Inspector
Design	☐									
Doc/Data	☐									
Equip/Tooling	☐									
Handling/Pre	☐									
Material	☐									
Operator	☐									
Offset/Setup	☐									
Process	☐									
Supplier	☐									
Training	☐									
Transport	☐									
Unapproved	☐									

FAULT CATEGORY

Landing Gear

- ☐ Bending
- ☐ Centre Not Concentric
- ☐ Cracks
- ☐ Crimp/Kink/Ripple/Wave
- ☐ Cuffs
- ☐ Crushing
- ☐ Heat Treat
- ☐ Inspection Strip in Tube
- ☐ Marks/Chatter
- ☐ Turning Sequence
- ☐ Wave/Twist in Tube

General

- ☐ Bend
- ☐ BOM/Route
- ☐ Broken/Damage/Defect
- ☐ Burrs
- ☐ Contamination
- ☐ Countersink
- ☐ Cut Too Short
- ☐ Drawing
- ☐ Drill Holes
- ☐ Finish
- ☐ Fit/Function
- ☐ Folio/Program
- ☐ Grain
- ☐ Hardware
- ☐ Inspection Incomplete/Unqualified
- ☐ Instructions Incomplete/Unclear
- ☐ Misaligned/off center
- ☐ Mislabeled
- ☐ Misread
- ☐ Off-set
- ☐ Out of Calibration
- ☐ Out of Sequence
- ☐ Outside Dimensions
- ☐ Over/Under tolerance
- ☐ Part Incorrect
- ☐ Part Lost/Missing
- ☐ Part Moved
- ☐ Positioned Wrong
- ☐ Power Loss/Surge
- ☐ Pressure/Forced
- ☐ Set-up
- ☐ Temperature/Cure
- ☐ Weld
- ☐ Wrong Stock Pulled
- ☐ Other

_____

_____

_____

Work Order ID 129874

February-23-15 10:28:27 AM

129874

Item ID: D412-698-042 **Accept** *N900040100* **Setup Start** *NS1*

Revision ID: **Stop** *NS2*

Item Name: Hinge Panel Automatic Door Opener RH Aluminum Door

Start Date: 2/11/15 **Start Qty:** 1.00 *1* **Cust Item ID:**

Required Date: 2/23/15 **Req'd Qty:** 1.00 *1* **Customer:**

Reference:

Run Start *NR1*

Stop *NR2*

Approvals: **Process Plan:** _____ **Date:** _____ **Tooling:** _____ **Date:** _____

QC: _____ **Date:** _____ **SPC (Y/N):** _____ **Date:** _____

Sequence ID/ Work Center ID	Operation Description	Set Up/ Run Hours	Tool ID	Tool #	Plan Code	Accept Qty	Reject Qty	Reject Number	Insp. Stamp
130	Pick Kit	0.00							
130									
Packaging	**Memo**	0.00							
Packaging	Identify and pack for shipping as per PPP D412-698-042 Location: 022 PPP rev: _____								
140	QC21- Final Inspection - Work Order Release	0.00							
140									
QC	**Memo**	0.00							
Quality Control									

MAY 04 2015 DAS 06 9-89

MLS MAY 05 2015

15.5.4

DART AEROSPACE

DQA: _____ Date: _____

WORK ORDER NON-CONFORMANCE / UPDATE

QA Closed: Date:

Work Order update only ☐

Work Order: _____

Part No. _____

NCR No. _____

DISPOSITION

- ☐ Rework
- ☐ Scrap
- ☐ Use-as-is
- ☐ Suspected Unapproved

AGAINST DEPARTMENT/PROCESS

- ☐ Skid-tube
- ☐ Machining
- ☐ Thermoforming
- ☐ Large Fab
- ☐ Crosstube
- ☐ Small Fab
- ☐ Finishing
- ☐ Composite
- ☐ Water Jet
- ☐ Prod. Eng. Coor.
- ☐ Rec/Store/Packaging
- ☐ Supplier
- ☐ Engineering
- ☐ Quality
- ☐ Other
- ☐

Root Cause		Date	Step	Qty	Description of work order update or non-conformance	Initial Chief Eng	Action Description	Sign & Date	Verification	QC Inspector
Design	☐									
Doc/Data	☐									
Equip/Tooling	☐									
Handling/Pre	☐									
Material	☐									
Operator	☐									
Offset/Setup	☐									
Process	☐									
Supplier	☐									
Training	☐									
Transport	☐									
Unapproved	☐									

FAULT CATEGORY

Landing Gear

- ☐ Bending
- ☐ Centre Not Concentric
- ☐ Cracks
- ☐ Crimp/Kink/Ripple/Wave
- ☐ Cuffs
- ☐ Crushing
- ☐ Heat Treat
- ☐ Inspection Strip in Tube
- ☐ Marks/Chatter
- ☐ Turning Sequence
- ☐ Wave/Twist in Tube

General

- ☐ Bend
- ☐ BOM/Route
- ☐ Broken/Damage/Defect
- ☐ Burrs
- ☐ Contamination
- ☐ Countersink
- ☐ Cut Too Short
- ☐ Drawing
- ☐ Drill Holes
- ☐ Finish
- ☐ Fit/Function
- ☐ Folio/Program
- ☐ Grain
- ☐ Hardware
- ☐ Inspection Incomplete/Unqualified
- ☐ Instructions Incomplete/Unclear
- ☐ Misaligned/off center
- ☐ Mislabeled
- ☐ Misread
- ☐ Off-set
- ☐ Out of Calibration
- ☐ Out of Sequence
- ☐ Outside Dimensions
- ☐ Over/Under tolerance
- ☐ Part Incorrect
- ☐ Part Lost/Missing
- ☐ Part Moved
- ☐ Positioned Wrong
- ☐ Power Loss/Surge
- ☐ Pressure/Forced
- ☐ Set-up
- ☐ Temperature/Cure
- ☐ Weld
- ☐ Wrong Stock Pulled
- ☐ Other

_____

_____

_____

Picklist Print

February-23-15 10:28:27 AM

Work Order ID: 129874 *129874*

Parent Item: D412-698-042 *D412-698-042*

Parent Item Name: Hinge Panel Automatic Door Opener RH Aluminum Door

Start Date: 2/11/15 **Required Date:** 2/23/15

Start Qty: 1.00 **Required Qty:** 1.00

Comments: IPP REV:A 11.08.18 new issue DD verf:JLM

Component Item ID/ Item Name	Replacement Item ID	Mfg/ Purch	Bin Item	Primary Location	Last Location	Route Seq ID	Unit of Measure	Qty on Hand	Qty per Kit	Total Qty	Qty Issued	Date Issued	Status
D3552-21 *D3552-21* Door Prop	DAS 46 9-89	Manufactured	No			110	Each	0.0000	1 **	1	128809	DAS 6 9-89	
D3622-1 *D3622-1* Ball Stud	DAS 46 9-89	Manufactured	No			110	Each	28.0000	1 **	1	137105		
				Location			**Loc Qty**		**Loc Code**				
				ST052			28						
					124028		18						
					128951		10						
D4330-042 *D4330-042* Airframe Bracket Assembly, RH	DAS 46 9-89	Manufactured	No			110	Each	2.0000	1 **	1		DAS 6 9-89	
				Location			**Loc Qty**		**Loc Code**				
				ST230B			2						
					119283		2						
D4330-3 *D4330-3* Door Bracket	DAS 46	Manufactured	No			110	Each	3.0000	1 **	1	APR 29 2015	DAS 6 9-89	
				Location			**Loc Qty**		**Loc Code**				
				ST102			3						
					101442		3						

DAS 6 9-89

DART AEROSPACE

DQA: _____ Date: _____

WORK ORDER NON-CONFORMANCE / UPDATE

QA Closed: Date:

Work Order update only ☐

Work Order: _____

Part No. _____

NCR No. _____

DISPOSITION

- ☐ Rework
- ☐ Scrap
- ☐ Use-as-is
- ☐ Suspected Unapproved

AGAINST DEPARTMENT/PROCESS

- ☐ Skid-tube
- ☐ Machining
- ☐ Thermoforming
- ☐ Large Fab
- ☐ Crosstube
- ☐ Small Fab
- ☐ Finishing
- ☐ Composite
- ☐ Water Jet
- ☐ Prod. Eng. Coor.
- ☐ Rec/Store/Packaging
- ☐ Supplier
- ☐ Engineering
- ☐ Quality
- ☐ Other

Root Cause		Date	Step	Qty	Description of work order update or non-conformance	Initial Chief Eng	Action Description	Sign & Date	Verification	QC Inspector
Design	☐									
Doc/Data	☐									
Equip/Tooling	☐									
Handling/Pre	☐									
Material	☐									
Operator	☐									
Offset/Setup	☐									
Process	☐									
Supplier	☐									
Training	☐									
Transport	☐									
Unapproved	☐									

FAULT CATEGORY

Landing Gear

- ☐ Bending
- ☐ Centre Not Concentric
- ☐ Cracks
- ☐ Crimp/Kink/Ripple/Wave
- ☐ Cuffs
- ☐ Crushing
- ☐ Heat Treat
- ☐ Inspection Strip in Tube
- ☐ Marks/Chatter
- ☐ Turning Sequence
- ☐ Wave/Twist in Tube

General

- ☐ Bend
- ☐ BOM/Route
- ☐ Broken/Damage/Defect
- ☐ Burrs
- ☐ Contamination
- ☐ Countersink
- ☐ Cut Too Short
- ☐ Drawing
- ☐ Drill Holes
- ☐ Finish
- ☐ Fit/Function
- ☐ Folio/Program
- ☐ Grain
- ☐ Hardware
- ☐ Inspection Incomplete/Unqualified
- ☐ Instructions Incomplete/Unclear
- ☐ Misaligned/off center
- ☐ Mislabeled
- ☐ Misread
- ☐ Off-set
- ☐ Out of Calibration
- ☐ Out of Sequence
- ☐ Outside Dimensions
- ☐ Over/Under tolerance
- ☐ Part Incorrect
- ☐ Part Lost/Missing
- ☐ Part Moved
- ☐ Positioned Wrong
- ☐ Power Loss/Surge
- ☐ Pressure/Forced
- ☐ Set-up
- ☐ Temperature/Cure
- ☐ Weld
- ☐ Wrong Stock Pulled
- ☐ Other _____

Picklist Print

February-23-15 10:28:27 AM

Work Order ID: 129874 *129874*

Parent Item: D412-698-042 *D412-698-042*

Parent Item Name: Hinge Panel Automatic Door Opener RH Aluminum Door

Start Date: 2/11/15 **Required Date:** 2/23/15

Start Qty: 1.00 **Required Qty:** 1.00

MS21042L5 Purchased No 110 Each 753.0000 [redacted] 1

MS21042L5 DAS 46 ** DAS 6 9-89

Nut

Location		Loc Qty	Loc Code
GA		496	
	[redacted]	496	1
ST305		257	
	113523	1	
	116540	1	
	m128810	12	
	m131340	243	

NAS1149D0563J Purchased No 110 Each 1,373.000 [redacted] 1

NAS1149D0563J DAS 46 9-89 ** [redacted] DAS 6 9-89

Washer

APR 29 2015

Location		Loc Qty	Loc Code
GA		130	
	m125807	130	
ST260a		87	
	113524	3	
	118206	2	
	m130799	82	
ST269		156	
	m128257	156	
ST271		1000	
	m131026	1000	

DART AEROSPACE

DQA: _____ Date: _____

WORK ORDER NON-CONFORMANCE / UPDATE

QA Closed: Date:

Work Order update only ☐

Work Order: _____

Part No. _____

NCR No. _____

DISPOSITION

- ☐ Rework
- ☐ Scrap
- ☐ Use-as-is
- ☐ Suspected Unapproved

AGAINST DEPARTMENT/PROCESS

- ☐ Skid-tube
- ☐ Machining
- ☐ Thermoforming
- ☐ Large Fab
- ☐ Crosstube
- ☐ Small Fab
- ☐ Finishing
- ☐ Composite
- ☐ Water Jet
- ☐ Prod. Eng. Coor.
- ☐ Rec/Store/Packaging
- ☐ Supplier
- ☐ Engineering
- ☐ Quality
- ☐ Other
- ☐

Root Cause		Date	Step	Qty	Description of work order update or non-conformance	Initial Chief Eng	Action Description	Sign & Date	Verification	QC Inspector
Design	☐									
Doc/Data	☐									
Equip/Tooling	☐									
Handling/Pre	☐									
Material	☐									
Operator	☐									
Offset/Setup	☐									
Process	☐									
Supplier	☐									
Training	☐									
Transport	☐									
Unapproved	☐									

FAULT CATEGORY

Landing Gear

- ☐ Bending
- ☐ Centre Not Concentric
- ☐ Cracks
- ☐ Crimp/Kink/Ripple/Wave
- ☐ Cuffs
- ☐ Crushing
- ☐ Heat Treat
- ☐ Inspection Strip in Tube
- ☐ Marks/Chatter
- ☐ Turning Sequence
- ☐ Wave/Twist in Tube

General

- ☐ Bend
- ☐ BOM/Route
- ☐ Broken/Damage/Defect
- ☐ Burrs
- ☐ Contamination
- ☐ Countersink
- ☐ Cut Too Short
- ☐ Drawing
- ☐ Drill Holes
- ☐ Finish
- ☐ Fit/Function
- ☐ Folio/Program
- ☐ Grain
- ☐ Hardware
- ☐ Inspection Incomplete/Unqualified
- ☐ Instructions Incomplete/Unclear
- ☐ Misaligned/off center
- ☐ Mislabeled
- ☐ Misread
- ☐ Off-set
- ☐ Out of Calibration
- ☐ Out of Sequence
- ☐ Outside Dimensions
- ☐ Over/Under tolerance
- ☐ Part Incorrect
- ☐ Part Lost/Missing
- ☐ Part Moved
- ☐ Positioned Wrong
- ☐ Power Loss/Surge
- ☐ Pressure/Forced
- ☐ Set-up
- ☐ Temperature/Cure
- ☐ Weld
- ☐ Wrong Stock Pulled
- ☐ Other

_____

_____

_____

DART SERVICE INSTRUCTION

TO AMEND INSTALLATION INSTRUCTIONS
IIN-D412-698 REV. E OR LATER APPROVED REVISION
REF. TCCA STC: SH92-43
REF. FAA STC: SR01446NY
REF. EASA STC: EASA.IM.R.S.00709
REF. BRASIL STC: 2010S10-09

1.0 PURPOSE:
The purpose of this DSI is to add the optional automatic door opener kit for both the OEM aluminum (Bell P/N 205-031-423-005/-157/-006/-158), OEM composite (Bell P/N 412-030-029-101/-102), and Dart Spacedoor™ (Dart P/N D412-694-03/-04) hinge panel doors.

2.0 DESCRIPTION:
The Dart D412-698-XXX Hinge Panel Automatic Door Opener Kit permits the installation of a gas spring between the hinge panel doors (or "quarter" doors) and the cabin ceiling to prevent the doors from closing while the occupants enter or exit the aircraft.

The **D412-698-041 Hinge Panel Automatic Door Opener Kit** installs on the LH side of the aircraft and the **D412-698-042 Hinge Panel Automatic Door Opener Kit** installs on the RH side of the aircraft. These kits are designed to mount onto the OEM aluminum door (Bell P/N 205-031-423-005/-157/-006/-158).

The **D412-698-043 Hinge Panel Automatic Door Opener Kit** installs on the LH side of the aircraft and the **D412-698-044 Hinge Panel Automatic Door Opener Kit** installs on the RH side of the aircraft. These kits are designed to mount onto the OEM composite (Bell P/N 412-030-029-101/-102) and Dart Spacedoor™(Dart P/N D412-694-03/-04).

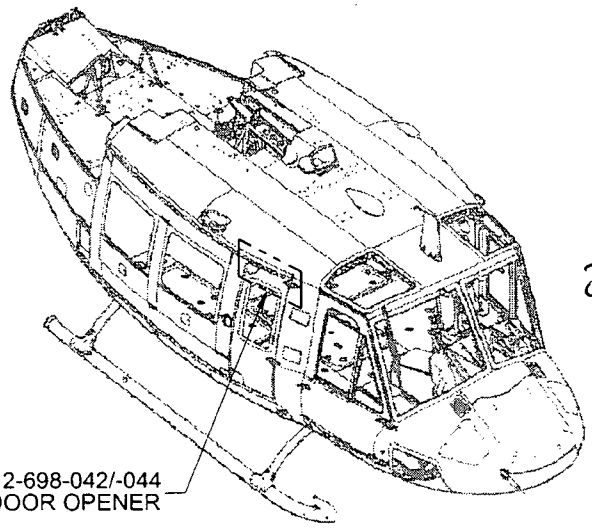

FIGURE 1: LOCATION OF HINGE PANEL AUTOMATIC DOOR OPENER KITS
(RH Installation Shown, LH Opposite)

REV.	DESCRIPTION	BY	DATE
C	D412-698-043/-044 NOW COMPATIBLE FOR INSTALLATION ON OEM COMPOSITE DOORS	MB	12.08.29
B	ADDED NOTE TO TRIM EXISTING TRIM/CEILING PANELS: ITEMS 11/12 OF SECTIONS 3.0/4.0 (SHT 2/4); UPDATED FIGURE 3 ACCORDINGLY. REF: PAR11-150.	MB	12.01.17
A	NEW ISSUE	DC	11.04.26

CANADA
DEPARTMENT OF TRANSPORT
AIRCRAFT CERTIFICATION
BRANCH
DAO # 01-O-01

APPROVED
BY: D. SHEPHERD (DE # 02)

DATE: 12.08.30
CERT. NO.: SH92-43
ISSUE NO.: 5

DESIGN	DC	**DART AEROSPACE LTD** HAWKESBURY, ONTARIO, CANADA
DRAWN	MB	
CHECKED	A.P.	DRAWING NO. DSI 9548 — REV. C — SHEET 1 OF 9
MFG. APPR.	N/A	
APPROVED		TITLE: HINGE DOOR OPENER KIT — SCALE: NTS
DE APPR.		
DATE	12.08.29	

COPYRIGHT © 2011 BY DART AEROSPACE LTD.
THIS DOCUMENT IS PRIVATE AND CONFIDENTIAL AND IS SUPPLIED ON THE EXPRESS CONDITION THAT IT IS NOT TO BE USED FOR ANY PURPOSE OR COPIED OR COMMUNICATED TO ANY OTHER PERSON WITHOUT WRITTEN PERMISSION FROM DART AEROSPACE LTD.

3.0 INSTALLATION OF D412-698-041/-042 HINGE PANEL AUTOMATIC DOOR OPENER (OEM ALUMINUM DOOR):

NOTE: The following instructions are for a typical RH side installation. For installation on the LH side, substitute D4330-041 for D4330-042.

1. Remove any ceiling or trim panels located on the RH foward cabin ceiling. Remove existing door spring Bell p/n 205-030-303-101 and associated hardware.

2. Using Figures 2 and 3 and dimensions shown as reference, locate D4330-042 Airframe Bracket Assembly, RH on the intersection of the existing aircraft rivet lines. The angled part of D4330-042 Airframe Bracket Assembly, RH is required to pick up on a minimum of 3 rivets. The bracket may be hand formed as necessary to improve fit with the contoured ceiling.

3. Mark the location of D4330-3 Door Bracket on the Hinge Panel Door as shown in Figure 4.

4. Verify that the D3552-21 Gas Spring will close properly (0.25" travel before it is fully retracted) when the door is closed. Adjust the position of the D4330-042 Airframe Bracket Assembly, RH if required to maintain rivet edge distance.

5. Verify that the D3552-21 Gas Spring will open the door to the desired position. Ensure the Gas Spring does not interfere with the door or airframe. Adjust location of D4330-3 Door Bracket if required.
   NOTE: When the door is fully open, it should be approximately perpendicular to the aircraft.

6. Remove the 205-031-423-005/-157/-006/-158 aluminum door from the aircraft per the Aircraft Maintenance Manual.

7. Remove any existing rivets where the D4330-042 Airframe Bracket Assembly, RH and D4330-3 Door Bracket will be installed.

8. Locate D4330-042 Airframe Bracket Assembly, RH on the aircraft ceiling per Figure 3. Transfer drill #30 (∅0.129") holes from the ceiling to D4330-042. Deburr holes.

9. Locate D4330-3 Door Bracket on the hinge panel door per Figure 4. Using Figure 5 as a guide for the approximate locations of the mounting holes, transfer drill 3x #30 (∅0.129") holes from the door skin to D4330-3 and drill 2x additional holes at locations shown in Figure 5. Deburr holes.

10. Apply a thin layer of Proseal 890 (or equivalent) to faying surface of the D4330-042/-3 brackets. Install the D4330-042 Airframe Bracket Assembly, RH using CR3213-4 rivets as shown in Figure 3. Install D4330-3 Door Bracket using CR3213-4 rivets as shown in Figure 4.

11. Pre-install the ceiling or trim panels that were removed in Step 1 and transfer mark contour of D4330-041 or -042 as shown in Figure 3 (SHT 6). Remove ceiling or trim panels and perform cutout to clear D4330-041 or -042. Touch-up finish of ceiling or trim panels cutout area in accordance with aircraft maintenance manual and re-install any ceiling or trim panels.

12. Install a D3622-1 Ball Stud on the D4330-3 Door Bracket using hardware specified in Figure 4.

13. Re-install modified door on aircraft per Aircraft Maintenance Manual.

14. Install D3552-21 Gas Spring onto the D3622-1 Ball Studs per Figure 2.

15. Verify proper gas spring and door operation.

CANADA
DEPARTMENT OF TRANSPORT
AIRCRAFT CERTIFICATION
BRANCH
DAO # 01-O-01

APPROVED

BY: _____
D. SHEPHERD (DE # 02)

DATE: 12.08.30
CERT. NO.: SH92-43
ISSUE NO.: 5

DESIGN	DC	**DART AEROSPACE LTD** HAWKESBURY, ONTARIO, CANADA
DRAWN		
CHECKED	A.P.	DRAWING NO. DSI 9548 REV. C SHEET 2 OF 9
MFG. APPR.	N/A	
APPROVED		TITLE HINGE DOOR OPENER KIT SCALE NTS
DE APPR.		
DATE	12.08.29	

COPYRIGHT © 2011 BY DART AEROSPACE LTD.
THIS DOCUMENT IS PRIVATE AND CONFIDENTIAL AND IS SUPPLIED ON THE EXPRESS CONDITION THAT IT IS NOT TO BE USED FOR ANY PURPOSE OR COPIED OR COMMUNICATED TO ANY OTHER PERSON WITHOUT WRITTEN PERMISSION FROM DART AEROSPACE LTD.

4.0 INSTALLATION OF D412-698-043/-044 HINGE PANEL AUTOMATIC DOOR OPENER (OEM COMPOSITE):

NOTE: The following instructions are for a typical RH side installation. For installation on the LH side, substitute D4330-041 for D4330-042.

1. Remove any ceiling or trim panels located on the RH foward cabin ceiling. Remove existing door spring Bell p/n 205-030-303-101 and associated hardware.

2. Using Figures 2 and 3 and dimensions shown as reference, locate D4330-042 Airframe Bracket Assembly, RH on the intersection of the existing aircraft rivet lines. The angled part of D4330-042 Airframe Bracket Assembly, RH is required to pick up on a minimum of 3 rivets. The bracket may be hand formed as necessary to improve fit with the contoured ceiling.

3. Mark the location of D4330-3 Door Bracket on the hinge panel door as shown in Figure 6.

4. Verify that the D3552-21 Gas Spring will close properly (0.25" travel before it is fully retracted) when the door is closed. Adjust the position of the D4330-042 Airframe Bracket Assembly, RH if required to maintain rivet edge distance.

5. Verify that the D3552-21 Gas Spring will open the door to the desired position. Ensure the Gas Spring does not interfere with the door or airframe. Adjust location of D4330-3 Door Bracket if required.
NOTE: When the door is fully open, it should be approximately perpendicular to the aircraft.

6. Remove the 412-030-029-101/-102 composite door from the aircraft per the Aircraft Maintenance Manual.

7. Remove any existing rivets, if any, where the D4330-042 Airframe Bracket Assembly, RH will be installed.

8. Locate D4330-042 Airframe Bracket Assembly, RH on the aircraft ceiling per Figure 3. Transfer drill #30 (∅0.129") holes from the ceiling to D4330-042. Deburr holes.

9. Locate D4330-3 Door Bracket on the hinge panel door per Figure 6. Using Figure 7 as a guide for the approximate locations of the mounting holes, drill 3x #7 (∅0.201") holes in D4330-3 and the inner door skin. Enlarge holes in hinge panel door inner skin to 9/16" (∅0.5625").

10. Install the 3x 80-005-2-8 inserts per Paragraph 3.2.12 of the BHT-MED-SRM at the locations drilled in Step 9 in the hinge panel door using Hysol EA934NA.

11. Apply a thin layer of Proseal 890 (or equivalent) to faying surface of the D4330-042/-3 brackets. Install the D4330-042 Airframe Bracket Assembly, RH using CR3213-4 rivets as shown in Figure 3. Install D4330-3 Door Bracket using hardware as shown in Figure 6.

12. Pre-install the ceiling or trim panels that were removed in Step 1 and transfer mark contour of D4330-041 or -042 as shown in Figure 3 (SHT 6). Remove ceiling or trim panels and perform cutout to clear D4330-041 or -042. Touch-up finish of ceiling or trim panels cutout area in accordance with aircraft maintenance manual and re-install any ceiling or trim panels.

13. Install a D3622-1 Ball Stud on the D4330-3 Door Bracket using hardware specified in Figure 6.

14. Re-install modified door on aircraft per Aircraft Maintenance Manual.

15. Install D3552-21 Gas Spring onto the D3622-1 Ball Studs per Figure 2.

16. Verify proper gas spring and door operation.

CANADA
DEPARTMENT OF TRANSPORT
AIRCRAFT CERTIFICATION
BRANCH
DAO # 01-O-01

APPROVED

BY: _____
D. SHEPHERD (DE # 02)

DATE: 12.08.30
CERT. NO.: SH92-43
ISSUE NO.: 5

DESIGN		**DART AEROSPACE LTD** HAWKESBURY, ONTARIO, CANADA
DRAWN		
CHECKED	A.P.	DRAWING NO. DSI 9548 REV. C SHEET 3 OF 9
MFG. APPR.	N/A	
APPROVED		TITLE HINGE DOOR OPENER KIT SCALE NTS
DE APPR.		
DATE	12.08.29	

COPYRIGHT © 2011 BY DART AEROSPACE LTD
THIS DOCUMENT IS PRIVATE AND CONFIDENTIAL AND IS SUPPLIED ON THE EXPRESS CONDITION THAT IT IS NOT TO BE USED FOR ANY PURPOSE OR COPIED OR COMMUNICATED TO ANY OTHER PERSON WITHOUT WRITTEN PERMISSION FROM DART AEROSPACE LTD

5.0 INSTALLATION OF D412-698-043/-044 HINGE PANEL AUTOMATIC DOOR OPENER (DART SPACEDOORS™):

NOTE: The following instructions are for a typical RH side installation. For installation on the LH side, substitute D4330-041 for D4330-042.

1. Remove any ceiling or trim panels located on the RH foward cabin ceiling. Remove existing door spring Dart p/n D3113-1 and associated hardware.

2. Using Figures 2 and 3 and dimensions shown as reference, locate D4330-042 Airframe Bracket Assembly, RH on the intersection of the existing aircraft rivet lines. The angled part of D4330-042 Airframe Bracket Assembly, RH is required to pick up on a minimum of 3 rivets. The bracket may be hand formed as necessary to improve fit with the contoured ceiling.

3. Mark the location of D4330-3 Door Bracket on the Spacedoor™ as shown in Figure 6.

4. Verify that the D3552-21 Gas Spring will close properly (0.25" travel before it is fully retracted) when the door is closed. Adjust the position of the D4330-042 Airframe Bracket Assembly, RH if required to maintain rivet edge distance.

5. Verify that the D3552-21 Gas Spring will open the door to the desired position. Ensure the Gas Spring does not interfere with the door or airframe. Adjust location of D4330-3 Door Bracket if required.
NOTE: When the door is fully open, it should be approximately perpendicular to the aircraft.

6. Remove the D412-694-03/-04 Door Assembly from the aircraft per ICA-D412-694 Section 52.1.

7. Remove any existing rivets where the D4330-042 Airframe Bracket Assembly, RH will be installed.

8. Locate D4330-042 Airframe Bracket Assembly, RH on the aircraft ceiling per Figure 3. Transfer drill #30 (∅0.129") holes from the ceiling to D4330-042. Deburr holes.

9. Locate D4330-3 Door Bracket on the Spacedoor™ per Figure 6. Using Figure 7 as a guide for the approximate locations of the mounting holes, drill 3x #7 (∅0.201") holes in D4330-3 and the inner door skin. Enlarge holes in Spacedoor™ inner skin to 9/16" (∅0.5625").

10. Install the 3x 80-005-2-8 inserts per Paragraph 3.2.12 of the BHT-MED-SRM at the locations drilled in Step 9 in the Spacedoor™ using Hysol EA934NA.

11. Apply a thin layer of Proseal 890 (or equivalent) to faying surface of the D4330-042/-3 brackets. Install the D4330-042 Airframe Bracket Assembly, RH using CR3213-4 rivets as shown in Figure 3. Install D4330-3 Door Bracket using hardware as shown in Figure 6.

12. Pre-install the ceiling or trim panels that were removed in Step 1 and transfer mark contour of D4330-041 or -042 as shown in Figure 3 (SHT 6). Remove ceiling or trim panels and perform cutout to clear D4330-041 or -042. Touch-up finish of ceiling or trim panels cutout area in accordance with aircraft maintenance manual and re-install any ceiling or trim panels.

13. Install a D3622-1 Ball Stud on the D4330-3 Door Bracket using hardware specified in Figure 6.

14. Re-install modified door on aircraft per ICA-D412-694 Section 52.2.

15. Install D3552-21 Gas Spring onto the D3622-1 Ball Studs per Figure 2.

16. Verify proper gas spring and door operation.

CANADA
DEPARTMENT OF TRANSPORT
AIRCRAFT CERTIFICATION
BRANCH
DAO # 01-O-01

APPROVED

BY: D. SHEPHERD (DE # 02)

DATE: 12.08.30
CERT. NO.: SH92-43
ISSUE NO.: 5

DESIGN		**DART AEROSPACE LTD** HAWKESBURY, ONTARIO, CANADA
DRAWN		
CHECKED	A.P.	DRAWING NO. DSI 9548 REV. C SHEET 4 OF 9
MFG. APPR.	N/A	
APPROVED		TITLE HINGE DOOR OPENER KIT SCALE NTS
DE APPR.		
DATE	12.08.29	

COPYRIGHT © 2011 BY DART AEROSPACE LTD
THIS DOCUMENT IS PRIVATE AND CONFIDENTIAL AND IS SUPPLIED ON THE EXPRESS CONDITION THAT IT IS NOT TO BE USED FOR ANY PURPOSE OR COPIED OR COMMUNICATED TO ANY OTHER PERSON WITHOUT WRITTEN PERMISSION FROM DART AEROSPACE LTD.

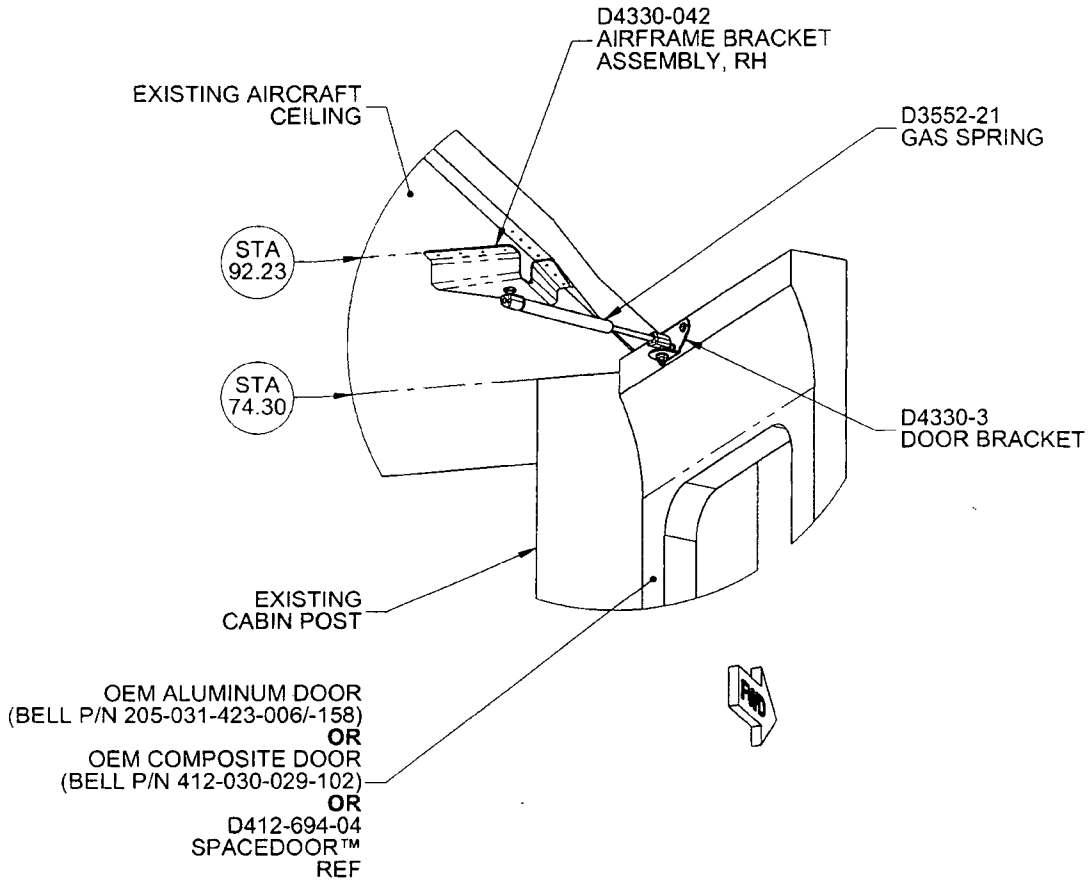

FIGURE 2: INSTALLATION DETAIL
(RH Installation Shown, LH Opposite)

CANADA
DEPARTMENT OF TRANSPORT
AIRCRAFT CERTIFICATION
BRANCH
DAO # 01-O-01

APPROVED

BY: _____
D. SHEPHERD (DE # 02)

DATE: 12.08.30
CERT. NO.: SH92-43
ISSUE NO.: 5

DESIGN		**DART AEROSPACE LTD** HAWKESBURY, ONTARIO, CANADA
DRAWN		
CHECKED	A.P.	DRAWING NO. DSI 9548 — REV. C — SHEET 5 OF 9
MFG. APPR.	N/A	
APPROVED		TITLE: HINGE DOOR OPENER KIT — SCALE: NTS
DE APPR.		
DATE	12.08.29	

COPYRIGHT © 2011 BY DART AEROSPACE LTD
THIS DOCUMENT IS PRIVATE AND CONFIDENTIAL AND IS SUPPLIED ON THE EXPRESS CONDITION THAT IT IS NOT TO BE USED FOR ANY PURPOSE OR COPIED OR COMMUNICATED TO ANY OTHER PERSON WITHOUT WRITTEN PERMISSION FROM DART AEROSPACE LTD

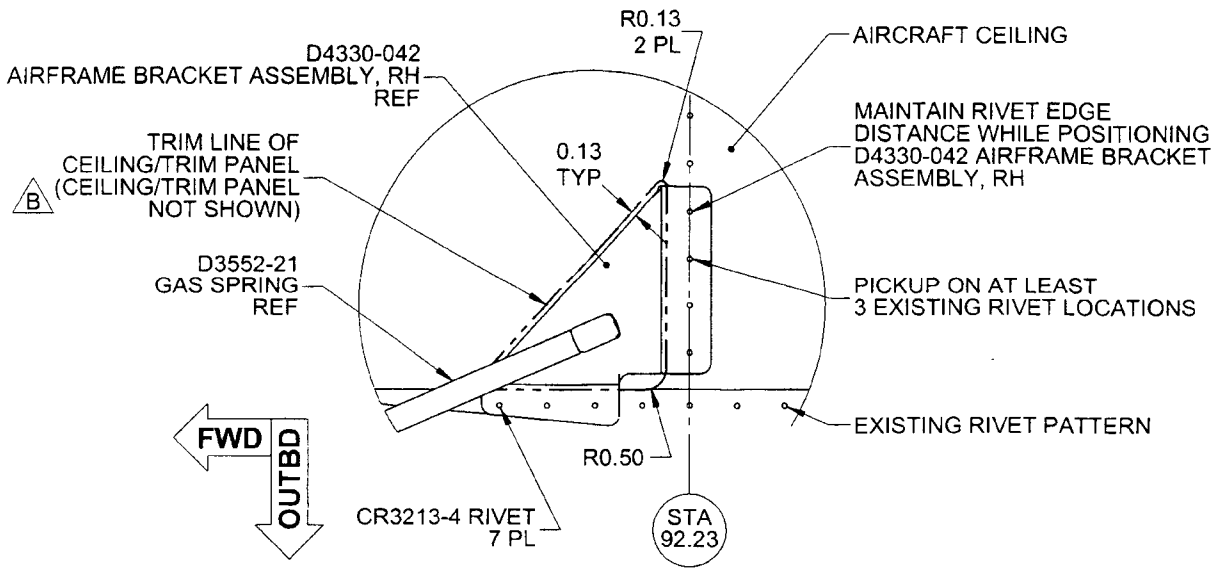

FIGURE 3: LOCATION OF D4330-042 AIRFRAME BRACKET ASSEMBLY
(RH Shown, LH Opposite)

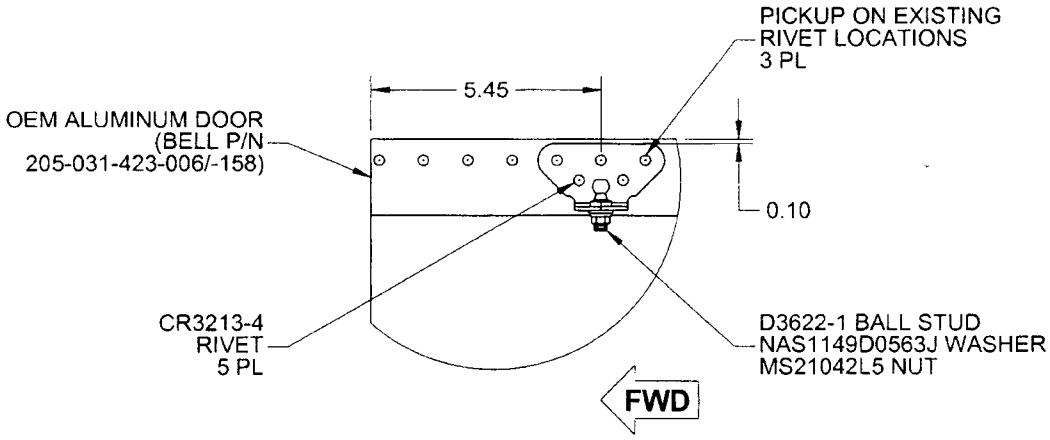

FIGURE 4: LOCATION OF D4330-3 DOOR BRACKET (OEM ALUMINUM DOOR)
(RH Shown, LH Opposite)

CANADA
DEPARTMENT OF TRANSPORT
AIRCRAFT CERTIFICATION
BRANCH
DAO # 01-O-01

APPROVED
BY: D. SHEPHERD (DE # 02)

DATE:	12.08.30
CERT. NO.:	SH92-43
ISSUE NO.:	5

DESIGN	BC	**DART AEROSPACE LTD** HAWKESBURY, ONTARIO, CANADA
DRAWN		
CHECKED	A.P.	DRAWING NO. DSI 9548 REV. C SHEET 6 OF 9
MFG. APPR.	N/A	
APPROVED		TITLE HINGE DOOR OPENER KIT SCALE NTS
DE APPR.		
DATE	12.08.29	

COPYRIGHT © 2011 BY DART AEROSPACE LTD
THIS DOCUMENT IS PRIVATE AND CONFIDENTIAL AND IS SUPPLIED ON THE EXPRESS CONDITION THAT IT IS NOT TO BE USED FOR ANY PURPOSE OR COPIED OR COMMUNICATED TO ANY OTHER PERSON WITHOUT WRITTEN PERMISSION FROM DART AEROSPACE LTD.

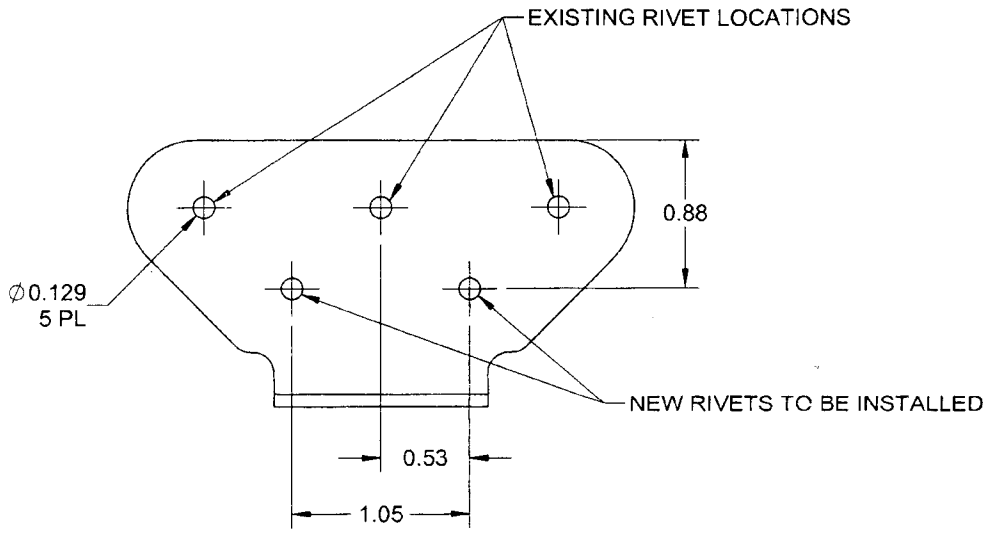

FIGURE 5: LOCATION OF D4330-3 DOOR BRACKET MOUNTING HOLES (OEM ALUMINUM DOOR)

(NOTE: MAINTAIN MINIMUM EDGE DISTANCE OF 0.25" FROM HOLE CENTER)

CANADA
DEPARTMENT OF TRANSPORT
AIRCRAFT CERTIFICATION
BRANCH
DAO # 01-O-01

APPROVED

BY: D. SHEPHERD (DE # 02)

DATE: 12.08.30
CERT. NO.: SH92-43
ISSUE NO.: 5

DESIGN	DG	**DART AEROSPACE LTD** HAWKESBURY, ONTARIO, CANADA
DRAWN		
CHECKED	A.P.	DRAWING NO. DSI 9548 — REV. C — SHEET 7 OF 9
MFG. APPR.	N/A	
APPROVED		TITLE: HINGE DOOR OPENER KIT — SCALE: NTS
DE APPR.		
DATE	12.08.29	

COPYRIGHT © 2011 BY DART AEROSPACE LTD
THIS DOCUMENT IS PRIVATE AND CONFIDENTIAL AND IS SUPPLIED ON THE EXPRESS CONDITION THAT IT IS NOT TO BE USED FOR ANY PURPOSE OR COPIED OR COMMUNICATED TO ANY OTHER PERSON WITHOUT WRITTEN PERMISSION FROM DART AEROSPACE LTD.

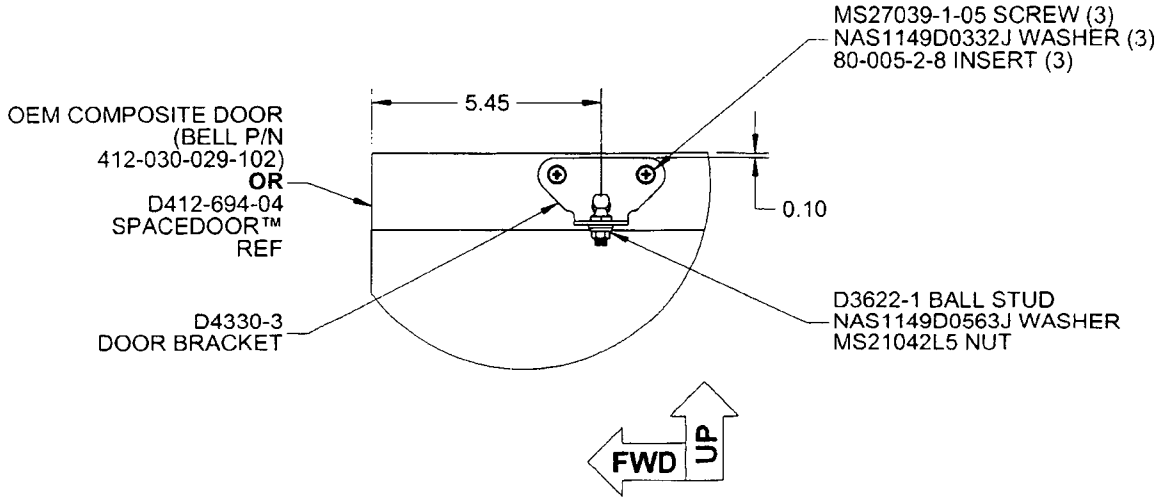

FIGURE 6: LOCATION OF D4330-3 DOOR BRACKET (OEM COMPOSITE DOOR AND DART SPACEDOOR™)
(RH Shown, LH Opposite)

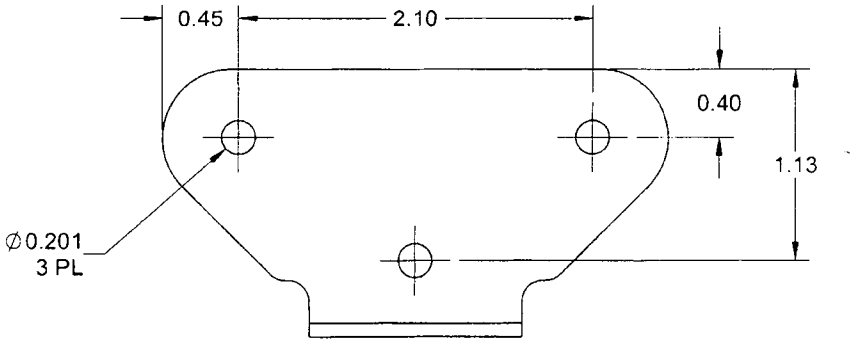

FIGURE 7: LOCATION OF D4330-3 DOOR BRACKET MOUNTING HOLES (OEM COMPOSITE DOOR AND DART SPACEDOOR™)

CANADA
DEPARTMENT OF TRANSPORT
AIRCRAFT CERTIFICATION
BRANCH
DAO # 01-O-01

APPROVED

BY: _____
D. SHEPHERD (DE # 02)

DATE: 12.08.30
CERT. NO.: SH92-43
ISSUE NO.: 5

DESIGN	DC	**DART AEROSPACE LTD** HAWKESBURY, ONTARIO, CANADA
DRAWN		
CHECKED	A.P.	DRAWING NO. DSI 9548 REV. C SHEET 8 OF 9
MFG. APPR.	N/A	
APPROVED		TITLE HINGE DOOR OPENER KIT SCALE NTS
DE APPR.		
DATE	12.08.29	

COPYRIGHT © 2011 BY DART AEROSPACE LTD
THIS DOCUMENT IS PRIVATE AND CONFIDENTIAL AND IS SUPPLIED ON THE EXPRESS CONDITION THAT IT IS NOT TO BE USED FOR ANY PURPOSE OR COPIED OR COMMUNICATED TO ANY OTHER PERSON WITHOUT WRITTEN PERMISSION FROM DART AEROSPACE LTD.

REFERENCE ONLY

5.0 WEIGHT & BALANCE:

INSTALLATION	WEIGHT	LATERAL		LONGITUDINAL	
		Arm	Moment	Arm	Moment
D412-698-041 LH (Aluminum door)	0.23 lb 0.10 kg	-43.63 in -1.11 m	-10.03 in-lb -0.11 m-kg	86.27 in 2.19 m	19.84 in-lb 0.22 m-kg
D412-698-042 RH (Aluminum door)	0.23 lb 0.10 kg	43.63 in 1.11 m	10.03 in-lb 0.11 m-kg	86.27 in 2.19 m	19.84 in-lb 0.22 m-kg
D412-698-043 LH (Composite door)	0.23 lb 0.10 kg	-43.63 in -1.11 m	-10.03 in-lb -0.11 m-kg	86.27 in 2.19 m	19.84 in-lb 0.22 m-kg
D412-698-044 RH (Composite door)	0.23 lb 0.10 kg	43.63 in 1.11 m	10.03 in-lb 0.11 m-kg	86.27 in 2.19 m	19.84 in-lb 0.22 m-kg
D412-698-043 LH (Spacedoor™)	0.23 lb 0.10 kg	-43.63 in -1.11 m	-10.03 in-lb -0.11 m-kg	86.27 in 2.19 m	19.84 in-lb 0.22 m-kg
D412-698-044 RH (Spacedoor™)	0.23 lb 0.10 kg	43.63 in 1.11 m	10.03 in-lb 0.11 m-kg	86.27 in 2.19 m	19.84 in-lb 0.22 m-kg

6.0 PARTS LIST:

Qty -041	Qty -042	Qty -043	Qty -044	Part Number	Description
X				**D412-698-041**	**HINGE PANEL AUTOMATIC DOOR OPENER KIT, LH (FOR OEM ALUMINUM DOOR)**
	X			**D412-698-042**	**HINGE PANEL AUTOMATIC DOOR OPENER KIT, RH (FOR OEM ALUMINUM DOOR)**
		X		**D412-698-043**	**HINGE PANEL AUTOMATIC DOOR OPENER KIT, LH (FOR OEM COMPOSITE DOOR AND DART SPACEDOOR™)**
			X	**D412-698-044**	**HINGE PANEL AUTOMATIC DOOR OPENER KIT, RH (FOR OEM COMPOSITE DOOR AND DART SPACEDOOR™)**
1	1	1	1	D3552-21	GAS SPRING
1	1	1	1	D3622-1	BALL STUD
1		1		D4330-041	AIRFRAME BRACKET ASSEMBLY, LH
	1		1	D4330-042	AIRFRAME BRACKET ASSEMBLY, RH
1	1	1	1	D4330-3	DOOR BRACKET
		3	3	80-005-2-8	INSERT
1	1	1	1	MS21042L5	NUT
		3	3	MS27039-1-05	SCREW
		3	3	NAS1149D0332J	WASHER
1	1	1	1	NAS1149D0563J	WASHER

CANADA
DEPARTMENT OF TRANSPORT
AIRCRAFT CERTIFICATION
BRANCH
DAO # 01-O-01

APPROVED

BY: D. SHEPHERD (DE # 02)

DATE: 12.08.30
CERT. NO.: SH92-43
ISSUE NO.: 5

DESIGN	DC	**DART AEROSPACE LTD** HAWKESBURY, ONTARIO, CANADA
DRAWN	B	
CHECKED	A.P.	DRAWING NO. DSI 9548 — REV. C — SHEET 9 OF 9
MFG. APPR.	N/A	
APPROVED		TITLE: HINGE DOOR OPENER KIT — SCALE: NTS
DE APPR.		
DATE	12.08.29	

COPYRIGHT © 2011 BY DART AEROSPACE LTD
THIS DOCUMENT IS PRIVATE AND CONFIDENTIAL AND IS SUPPLIED ON THE EXPRESS CONDITION THAT IT IS NOT TO BE USED FOR ANY PURPOSE OR COPIED OR COMMUNICATED TO ANY OTHER PERSON WITHOUT WRITTEN PERMISSION FROM DART AEROSPACE LTD.